Tungste-Met

Style 60° DIAMOND "H" STYLE

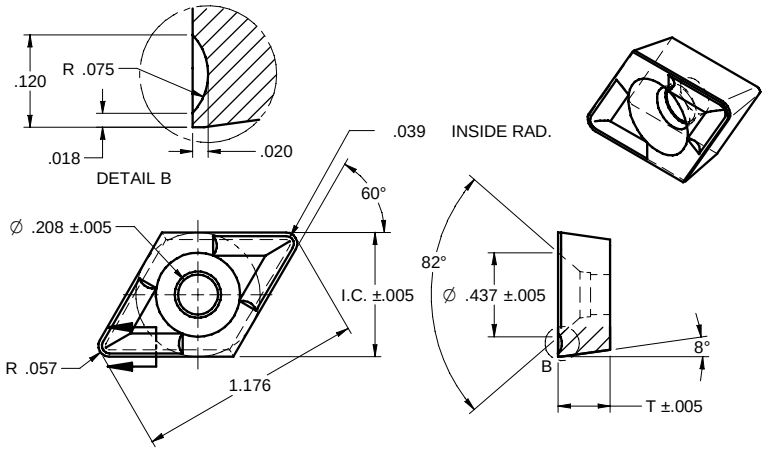

Insert	I.C.	T					Notes
A-2199-A	.645	.270					

Style 60° DIAMOND "B" STYLE

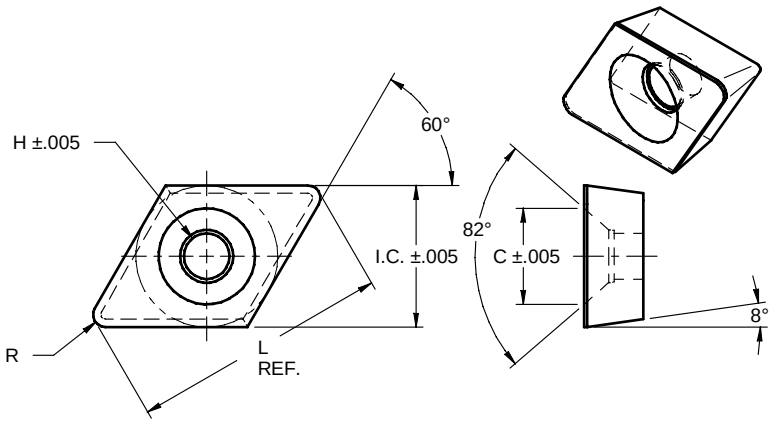

Insert	I.C.	T	R	L	H	C	Notes
T-17065-E-1	.525	.210	3/64	.956	.150	.348	
T-17065-E-3	.643	.268	3/64	1.192	.205	.431	