Tungste-Met	Style	FPR

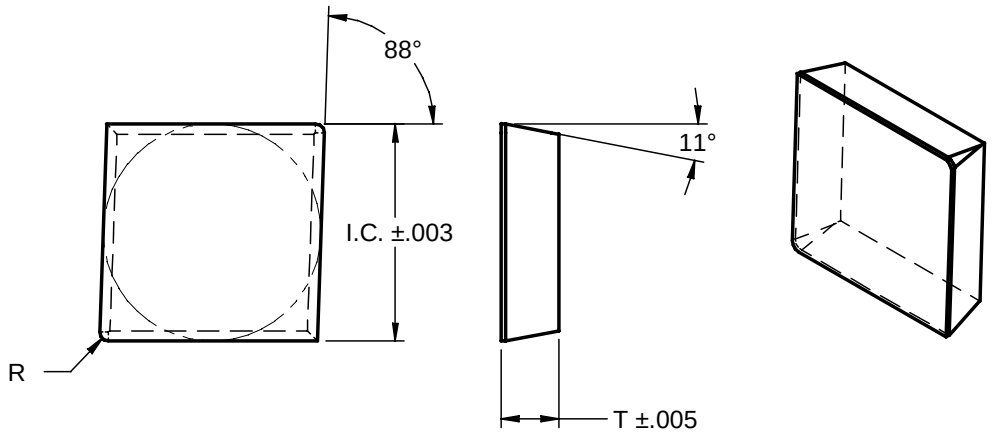

Insert	I.C.	T	R				Notes
FPR631	.765	.203	1/64				
FPR634	.765	.203	1/16				

	Style

Insert							Notes